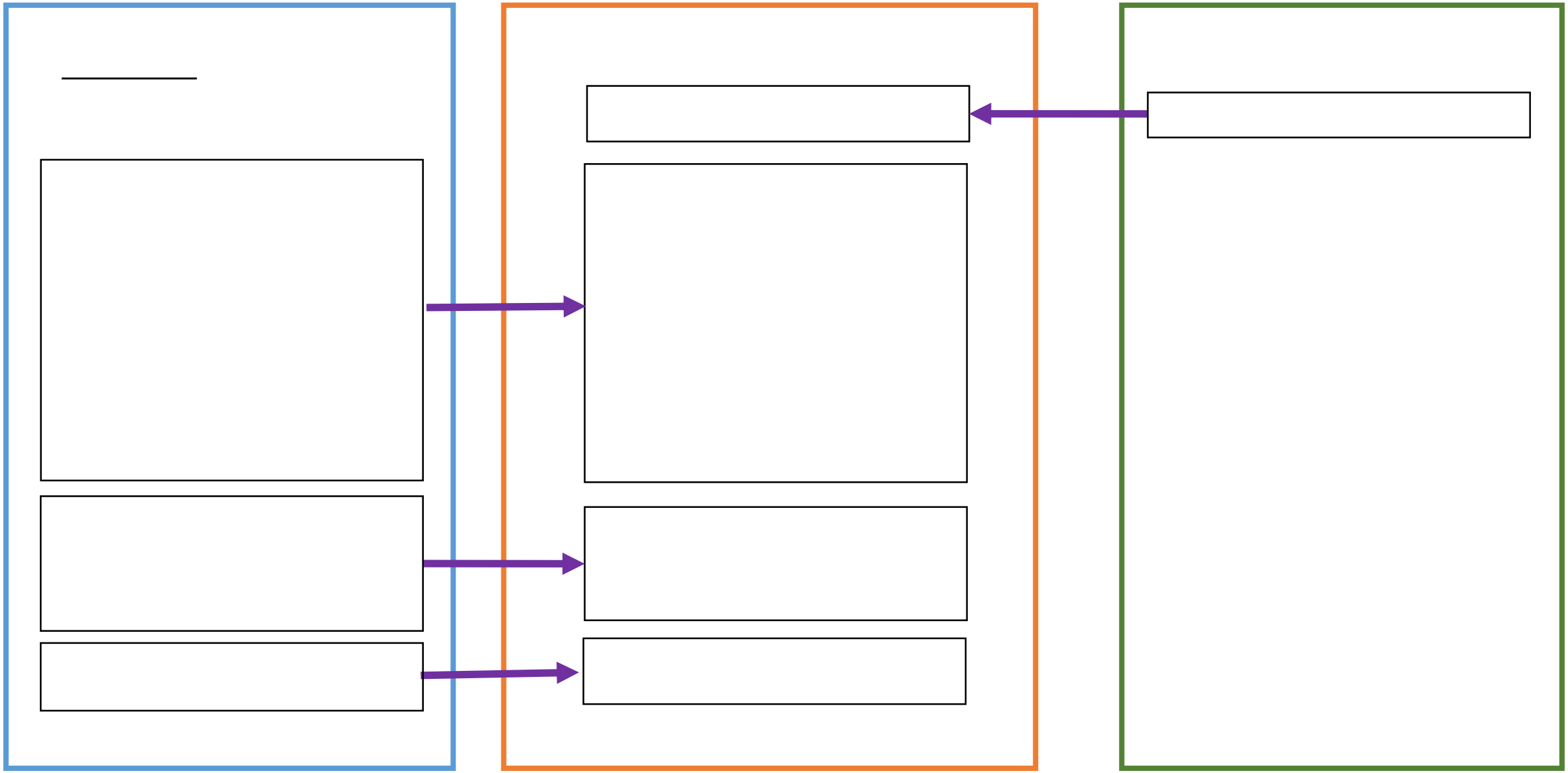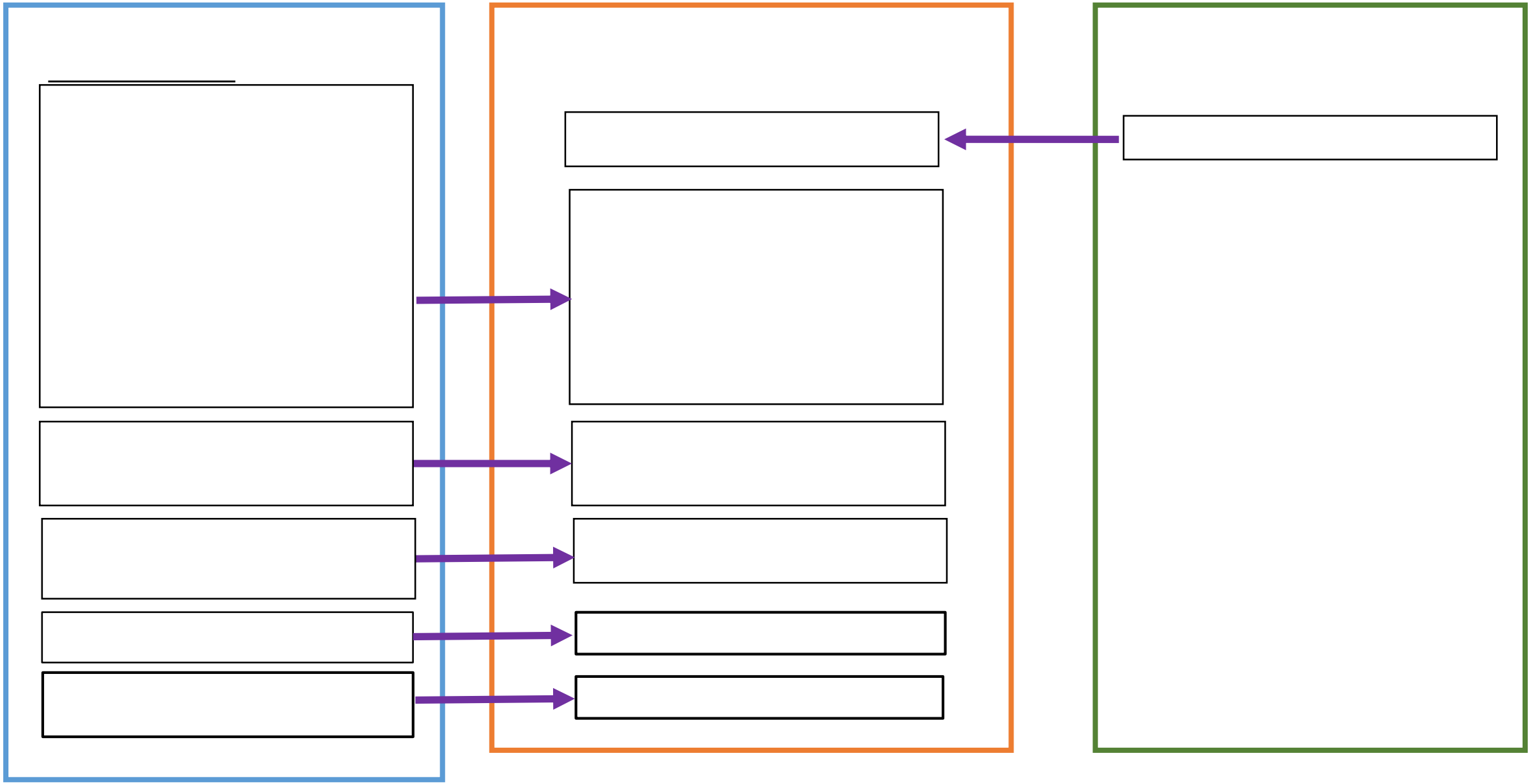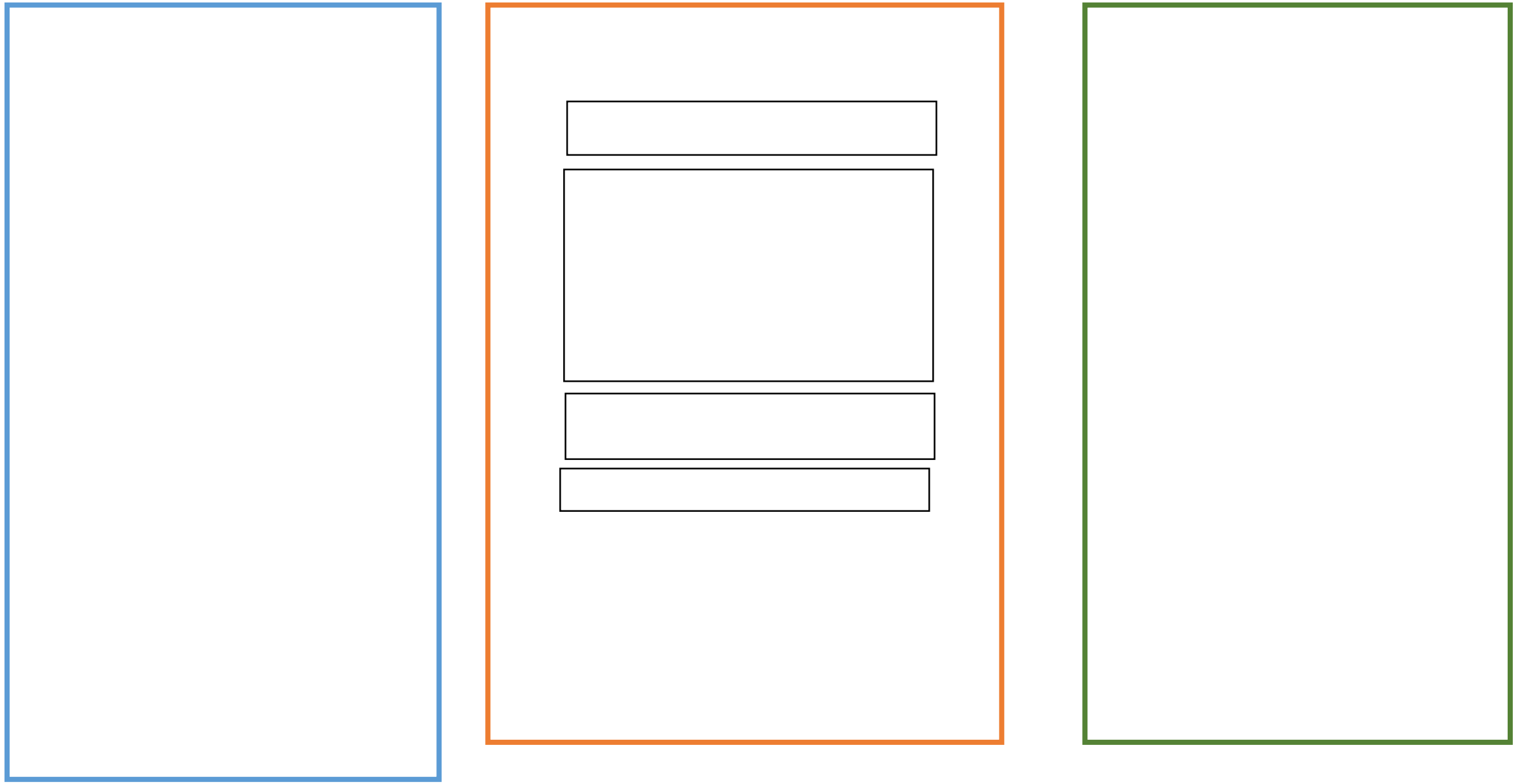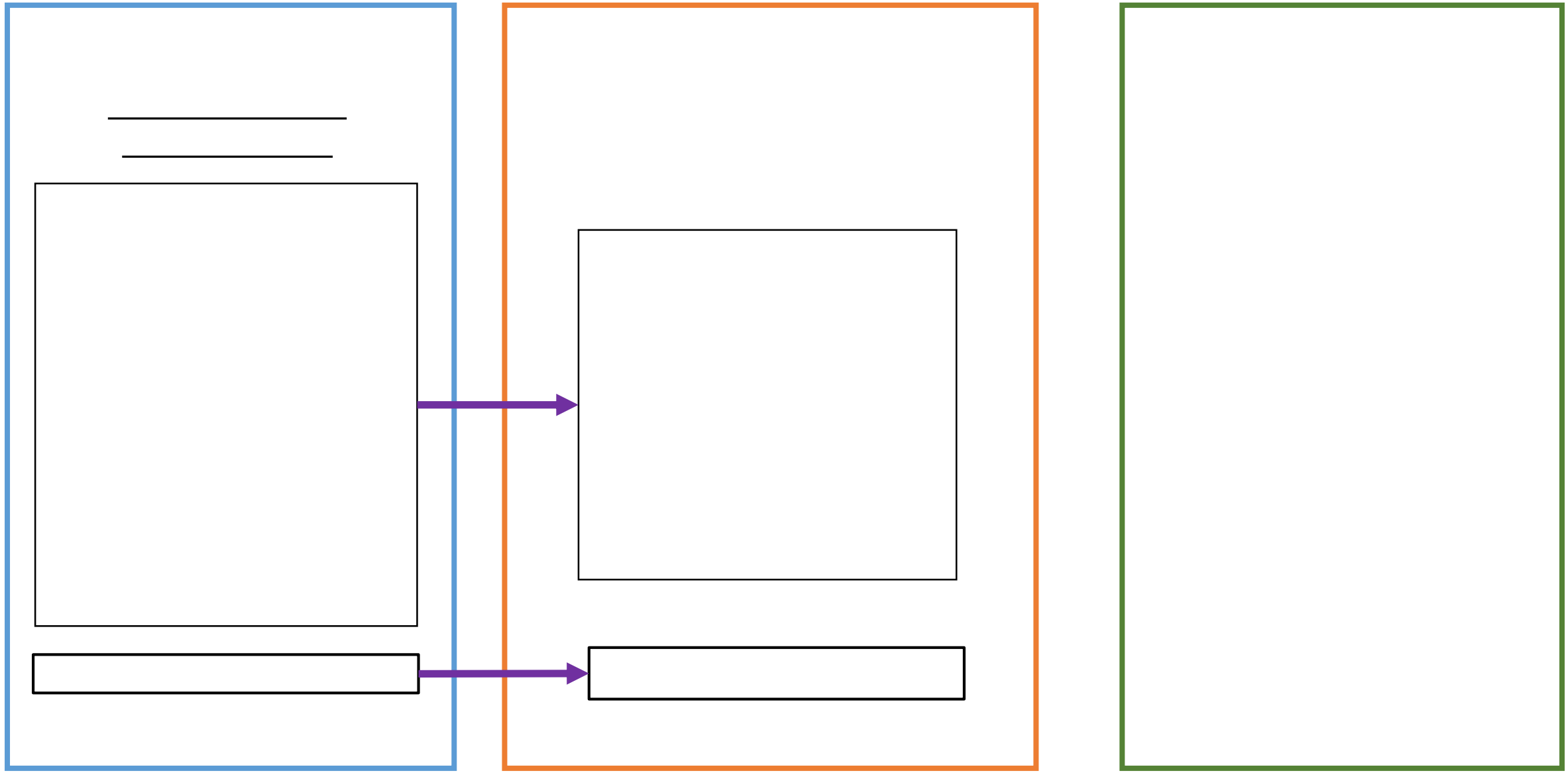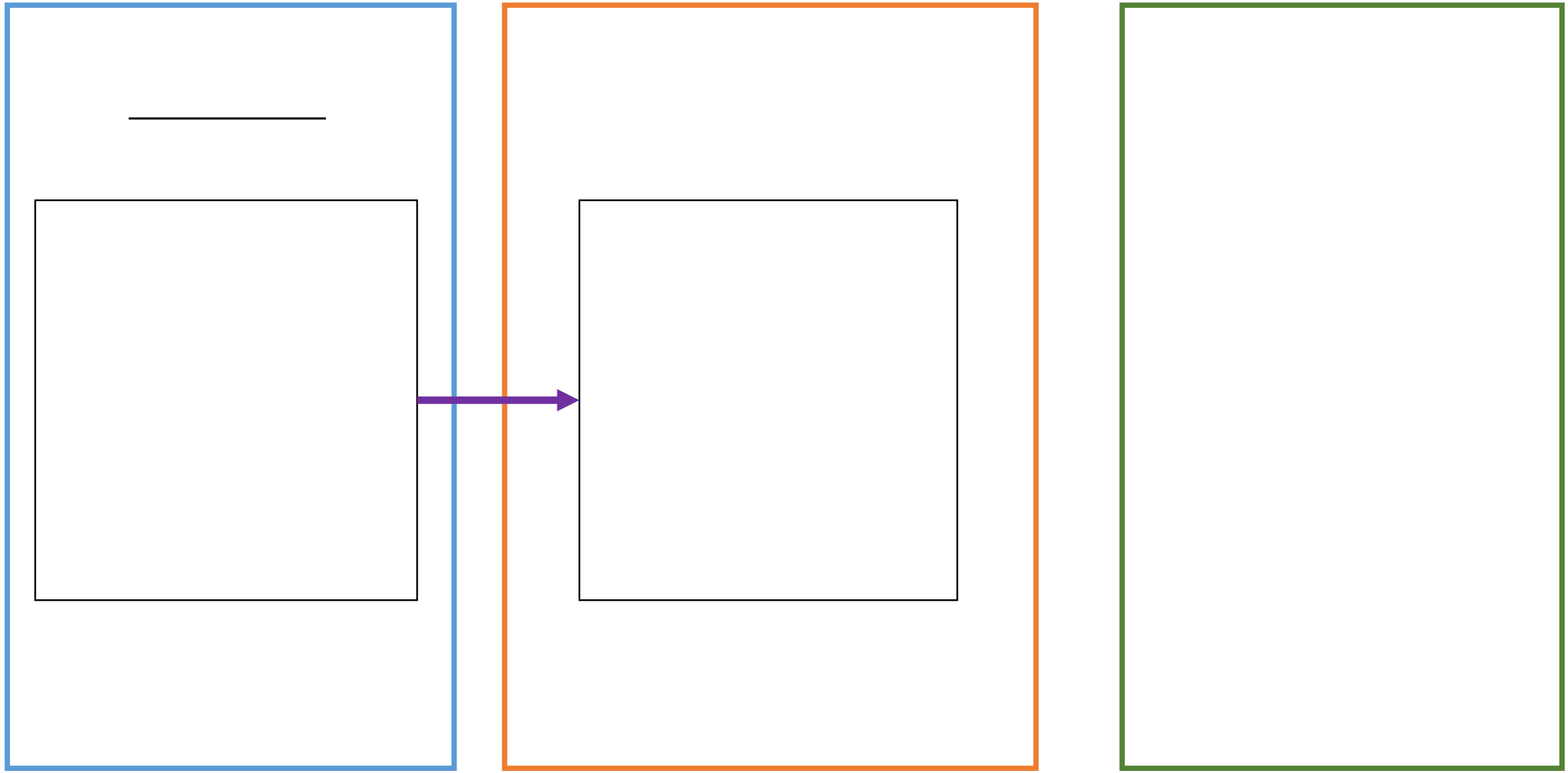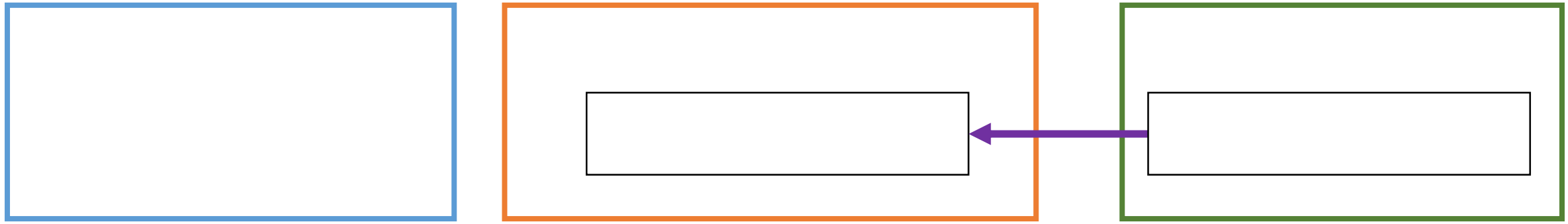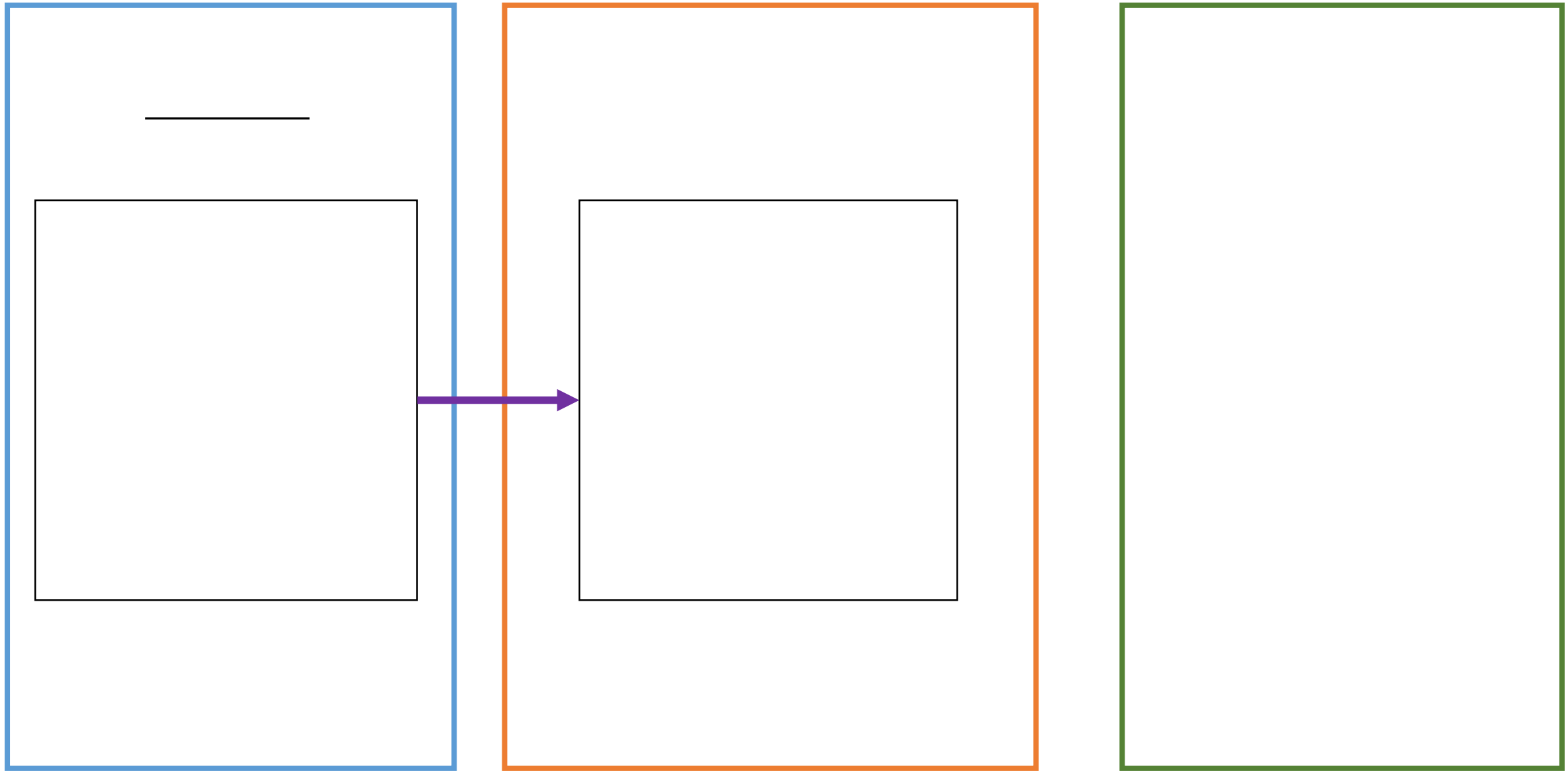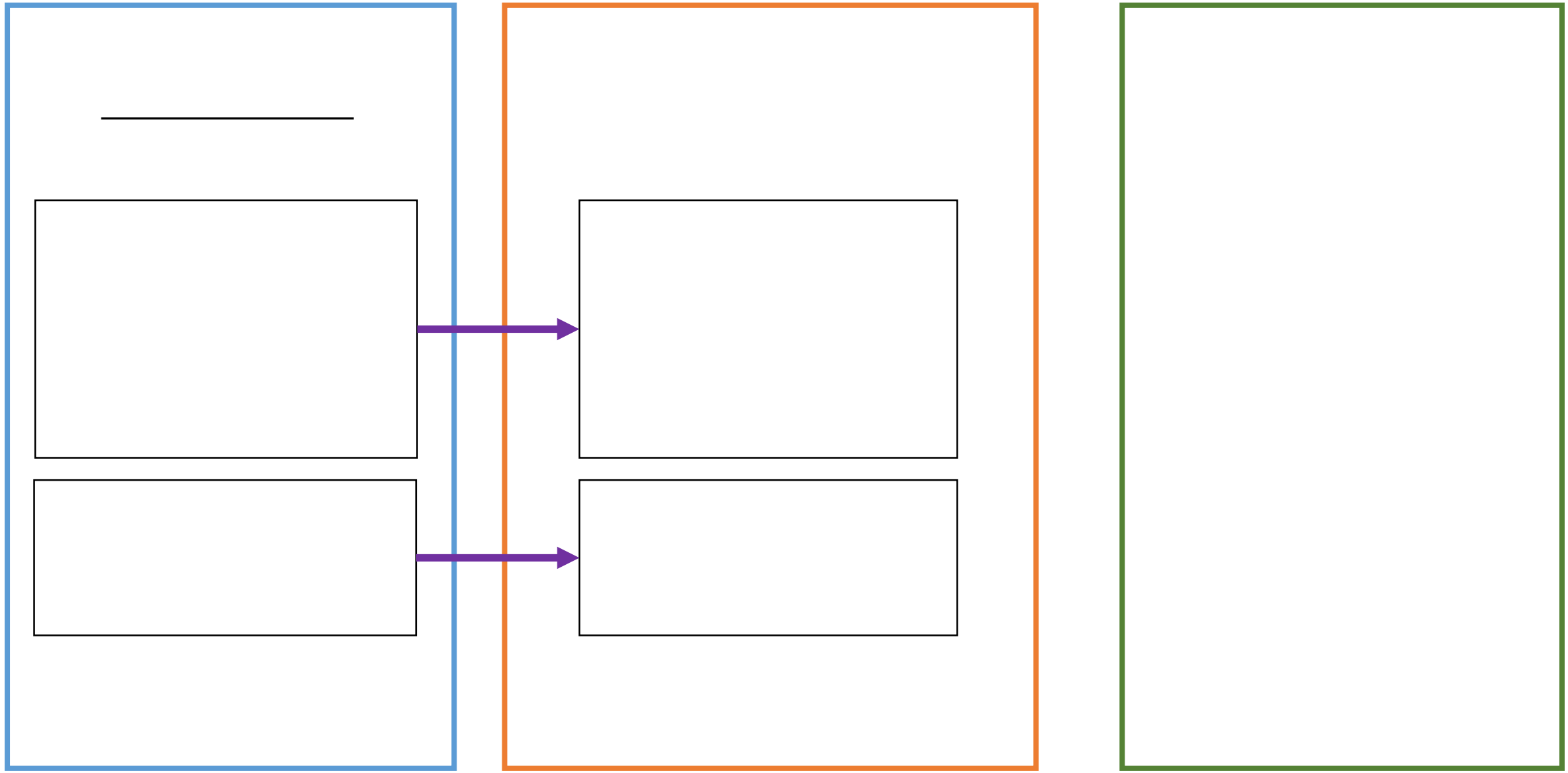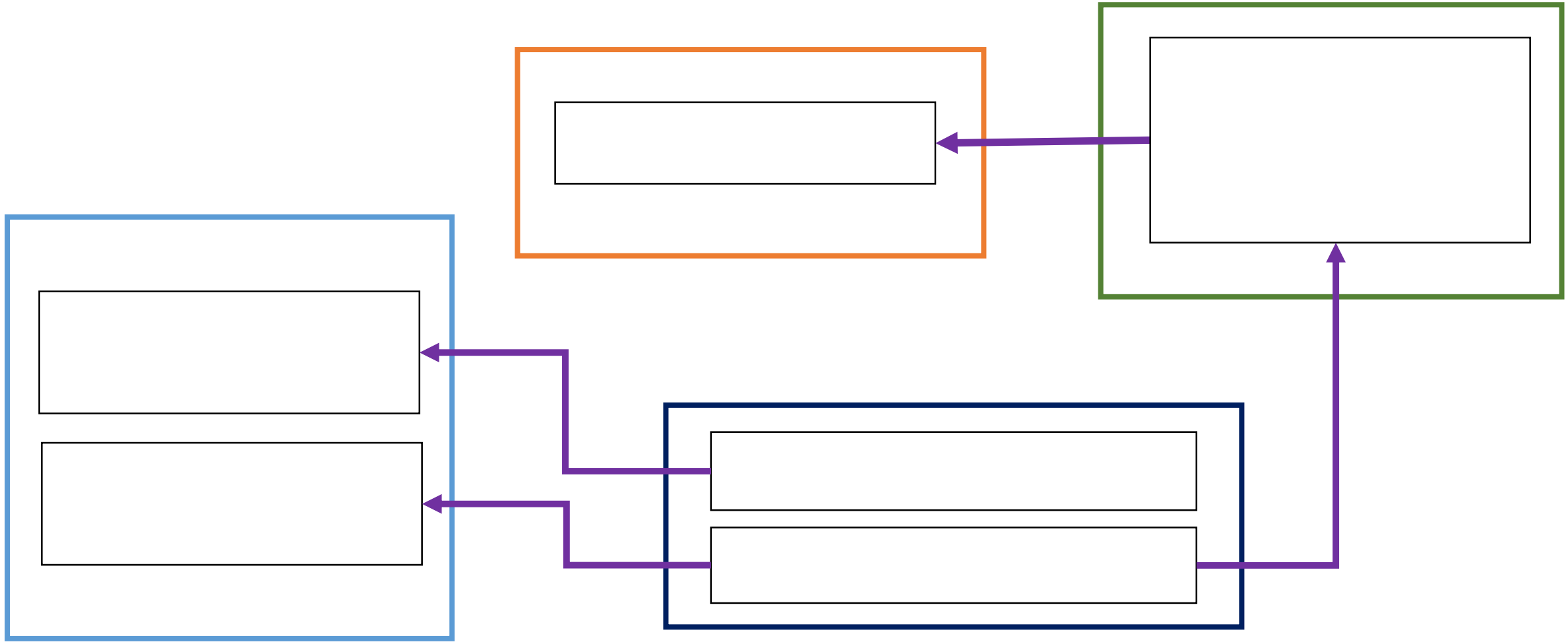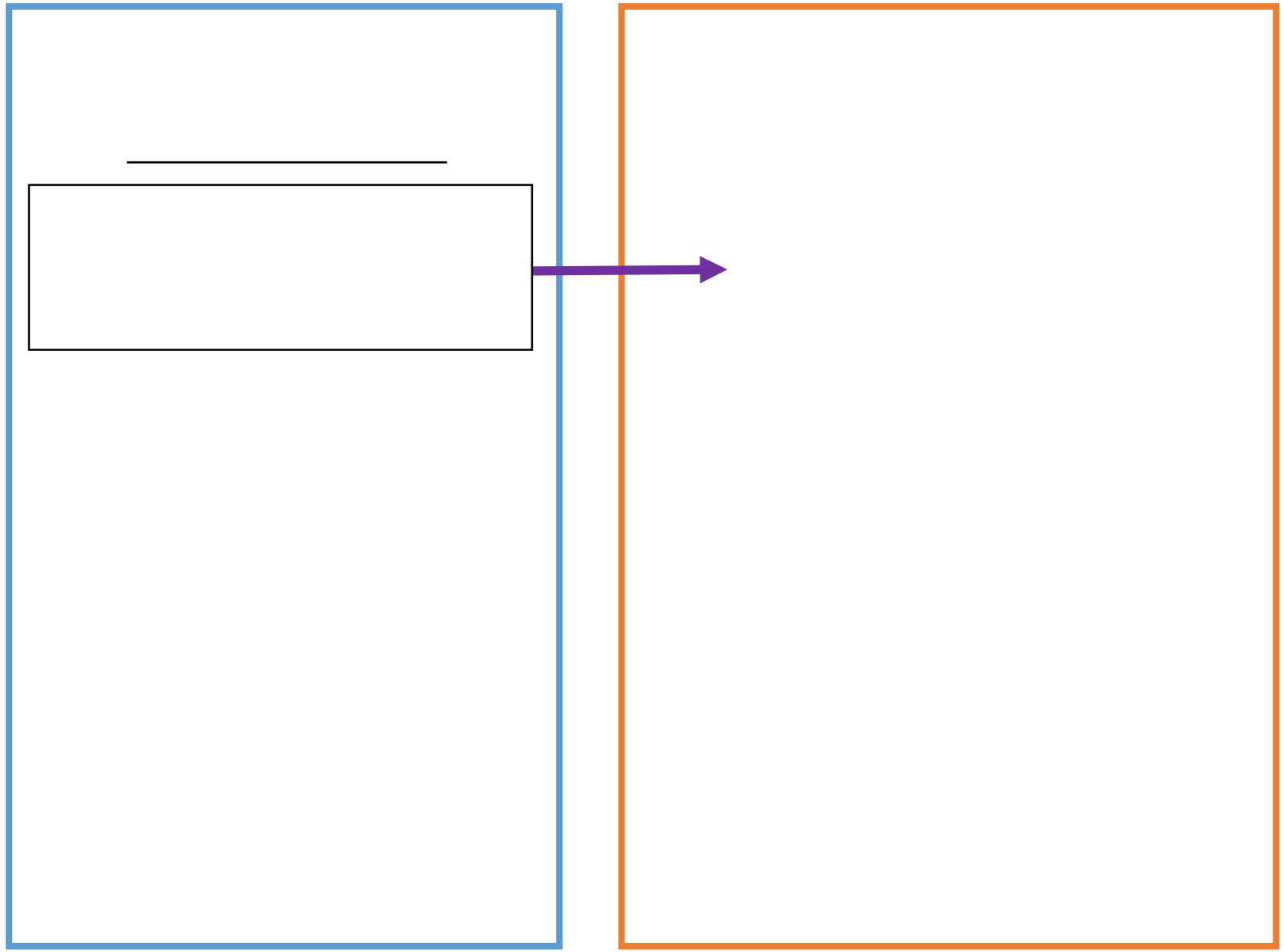Mapping of myVITA into Faculty Insight